AUTONAGAR 2X40 MVA,132/33 kV GIS SUBSTATION

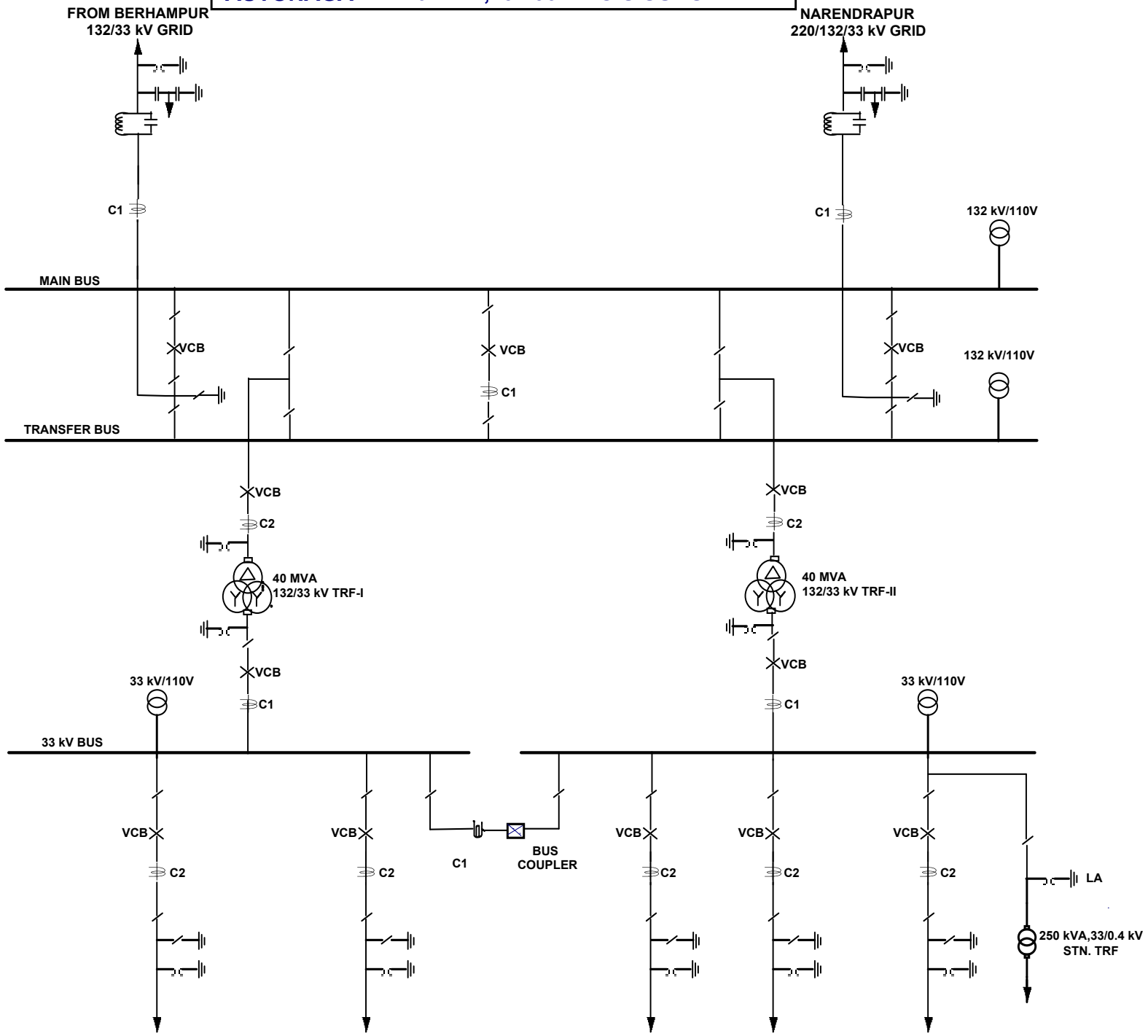

PREPAIRED By
OPTCL